CAESAR

Assembly Instructions

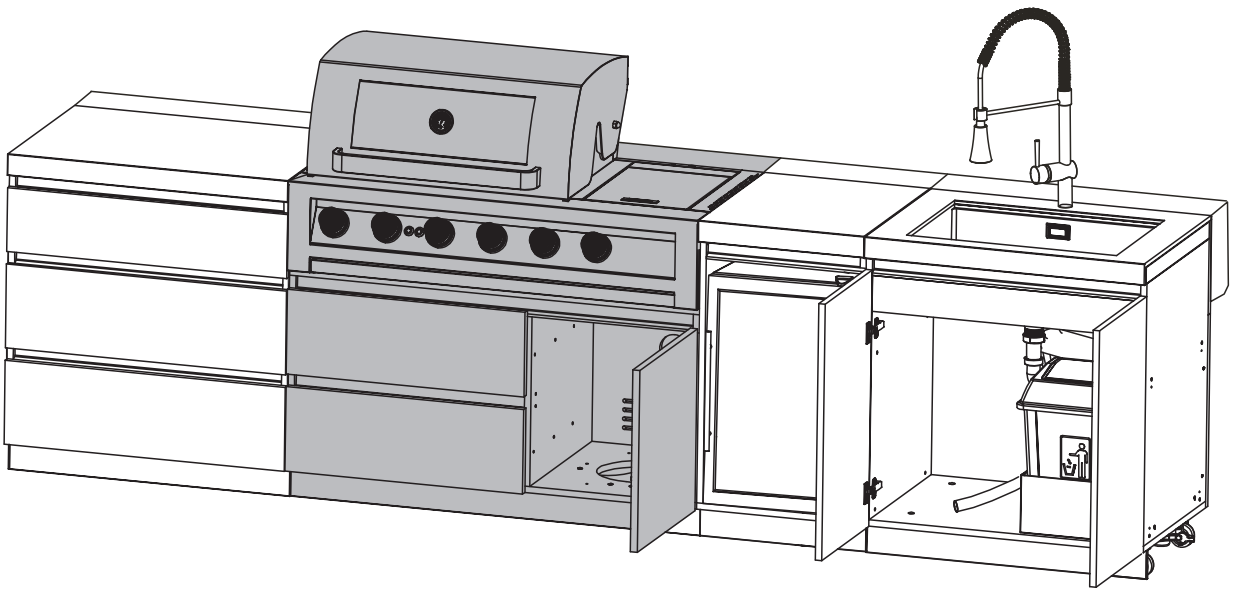

⚠ WARNING

For Outdoor use only.
Read the instructions before using the appliance
Read the instructions carefully and be sure your barbecue is properly installed, assembled and cared for. Failure to follow these instructions may result in serious bodily injury and/or property damage.
Please retain the manual for future reference.

⚠ WARNING

☑ **DO**：	☒ **DO NOT**：
☑ **DO** Use a spanner to tighten all gas fittings.	☒ **DO NOT** Lean over the appliance when lighting.
☑ **DO** Check all gas hoses and line connections for damage, cuts and cracks each time before using the appliance.	☒ **DO NOT** Store combustible materials, gasoline or flammable liquids within the vicinity of the appliance.
☑ **DO** Always leak test with soapy water.	☒ **DO NOT** Use the appliance with any cover on.
☑ **DO** Check main burners, side burners and infrared rear burner regularly for insect nests and spiders' webs. Nests and webs are dangerous and need to be fully cleaned.	☒ **DO NOT** Use any plastic or glass utensils on the appliance.
☑ **DO** Use the appliance outdoors only.	☒ **DO NOT** Use the appliance in strong winds.
☑ **DO** Remember accessible parts maybe very hot, **ALWAYS KEEP CHILDREN AWAY** from the appliance.	☒ **DO NOT** Dismantle the control valves.
☑ **DO** Have the gas cylinder filled by an authorized gas supplier.	☒ **DO NOT** Test for a gas leak with a naked flame.
☑ **DO** Always wear protective gloves when handling hot components.	☒ **DO NOT** Store spare gas cylinders in the appliance.
☑ **DO** Close the gas cylinder valve after each use.	☒ **DO NOT** Lay the gas cylinder down (ALWAYS KEEP UPRIGHT).
☑ **DO** Clean the grease tray regularly.	☒ **DO NOT** Use the appliance indoors.
☑ **DO** Use the grill at least 1.5m away from any wall or surface of combustible material, gasoline, flammable liquids or vapours.	☒ **DO NOT** Modify the construction of the appliance, the size of the burners, injector orifice or any other components.
☑ **DO** Turn off the gas supply at the gas cylinder after use.	☒ **DO NOT** Move the appliance when in use.
☑ **DO** Place the gas cylinder outside the appliance when in use.	☒ **DO NOT** Obstruct any ventilation on the appliance.
☑ **DO** Turn off the gas supply at the gas cylinder in the event of a gas leak.	☒ **DO NOT** Allow the flexible gas supply hose or any electrical cord to contact with any heated surface on the appliance.
	☒ **DO NOT** Use charcoal or any other solid fuel in this appliance.
	☒ **DO NOT** Disconnect any gas fittings while the appliance is in use.
	☒ **DO NOT** Use a rusty or damaged gas cylinder or a damaged valve.
	☒ **DO NOT** Fill the gas cylinder beyond 80% of the cap.

CONNECTING THE GAS CYLINDER TO THE APPLIANCE

This appliance is only suitable for use with low-pressure butane, propane, or their mixture of gases and fitted with the appropriate low-pressure regulator via a flexible hose.

The appliance is set to operate with：
* 28-30 mbar regulator with butane gas @ category 13+.
* 37 mbar regulator with propane gas @ category 13+.
* 37 mbar regulator with butane, propane or their mixtures @ category 13B/P (37).
* 30 mbar or 50 mbar regulator with butane, propane or their mixtures @ category 13B/P (30) or category 13B/P (50) respectively.

⚠ CAUTION

Only the gas type and gas category listed in the rating label on the appliance can be used with your appliance.

Gas Hose and Gas Regulator
Use only the regulator and hose approved for LP Gas at the correct pressure.

The pressure adjuster should comply with the standard EN16129 and current regulations in the country where it is installed, this may be found at your nearest retailer of the gas items. Refer to the technical date, it is strictly prohibited to use an adjustable pressure regulator.
The life of the regulator is estimated as 10 years. It is recommended that the regulator is changed within 10 years of the date of manufacture or when the national conditions require it.

The type of replaceable hose should meet the standard of EN16436-Class 3.

The hose used must conform to the relevant standard for the country of use. The length of the hose must be 0.7 meters (minimum) and 1.5 meters (maximum). Worn or damaged hose must be replaced. Ensure that the hose is not obstructed, kinked, or in contact with any part of the appliance other than at its connection. It is recommended that the hose is changed within 1 year of the date of manufacture or when the national conditions require it.

⚠ WARNING

The appliance is intended to be used with a regulator and hose assembly, if they are not supplied by the manufacture the user must choose an authorized regulator and gas hose complying with the standards required and the local regulations.

Storage of the Appliance
When the appliance is not in use the storage of the appliance indoors is only permissible if the cylinder is disconnected and removed from the appliance. When the appliance is not to be used for a long period of time it should be stored in a dust free environment and we suggest putting a cover on the appliance to protect it.

Gas Cylinder
The gas cylinder should not be dropped or handled roughly! When the appliance is not in use, the cylinder must be disconnected. Replace the protective cap on the cylinder after disconnecting the cylinder from the appliance the precaution should be taken when changing the gas cylinder that it is carried out away from any ignition source.

Used cylinders must be stored outdoors in an upright position and out of the reach of children. The cylinder must never be stored where temperatures can reach over 50° C. Do not store the cylinder near naked flames, pilot lights or other ignition sources of ignition.

The cylinder max width is 30cm and the max height is 40cm.

⚠ CAUTION

The appliance is designed for use with a gas cylinder 13KGS or less than 13KGS. The gas cylinder cannot be placed under the side burner when the side burner is in use.

Connection to the appliance
Before connection, ensure that there is no debris caught in the head of the gas cylinder, regulator, burner and burner parts.
If the hose is replaced it must be secured to the appliance and regulator connections with hose clips.

Disconnect the regulator from the cylinder (according to the directions supplied with the regulator) when the appliance is not in use.

Check for leakage
Make 2-3 fluid ounces of leak detecting solution by mixing one part washing up liquid with 3 parts water.

Ensure the control valve is "OFF" connect the cylinder to the regulator the regulator to the hose and the hose to the appliance, ensure the connections are secure then turn on the gas.

Brush the soapy solution on to the hose and all the joints, if bubbles appear you have a leak which must be rectified before use.

Retest after fixing the fault.

Turn OFF the gas at the cylinder after testing.

If leakage is detected and cannot be rectified, DO NOT attempt to cure the leakage but consult your gas dealer.

LIGHTING YOUR APPLIANCE

⚠ WARNING

This appliance is designed for use outdoors, away from any flammable materials.

It is important that there are no overhead obstructions and that there is a minimum distance of 1.5 m from the side or rear of the appliance.
It is important that the ventilation openings of the cylinder compartment are not obstructed.
The appliance must be used on a level, stable, non-flammable surface.
The appliance should be protected from direct draughts and should be positioned or protected against any direct penetration by water (e.g. rain).
Parts sealed by the manufacture or his agent must not be altered by the user.
No modifications should be made to any part of this appliance, repairs and maintenance should only be carried out by a registered service engineer.

DO NOT let children operate or play near the appliance.

DO NOT use charcoal or ceramic briquets in this appliance.

DO NOT light or use the side burner with the lid in a closed position.

DO NOT attempt to light the burners with the lid closed, a build-up of non-ignited gas inside a closed lid is hazardous.

The side burner is designed for a pot/pan with a diameter 180-260mm, the side burner lid cannot be used as a work table, do not put anything on the side burner lid when it is closed.

Lighting Instructions:

1. Read the instructions before lighting.
2. Open the lid and make sure all the knobs are on the OFF (●) Position.
3. Connect the regulator to the gas cylinder, regulator to the hose and the hose to the appliance, Turn the gas supply "ON" at the cylinder. Check with the use of soapy water for any gas leakage between the bottle and the regulator.
4. Push down and turn the control knob anticlockwise to the high position (🔥) a clicking sound is heard until the burner ignite, should the burner not ignites after a few clicks, turn the control knob back to the off position (●) and then repeat the process.
5. Adjust the heat by turning the knob to the High (🔥)/ Low (🔥) position.
6. To light up the other burners, repeat the same process for the adjacent burner and continue in sequence until all the burners are lit.
7. To turn the appliance OFF, turn the cylinder valve or regulator switch to the "OFF" position and then turn all the control knobs on the appliance clockwise to the "OFF" (●) position.

CLEANING AND CARE

⚠ WARNING

All cleaning and maintenance should be carried out when the appliance is cool and with the fuel supply turned OFF at the gas cylinder after each use. This appliance designed for use outdoors, away from any flammable materials.

DO NOT Mistake brown or black accumulation of grease and smoke for paint. The interior of the gas appliance is not painted at our factory (and should NEVER be painted). Apply a strong solution of detergent and water or use a grill cleaner with a scrub brush on the insides of the appliance lid and bottom. Rinse and allow to completely air dry.

DO NOT Apply a caustic grill or oven cleaner to painted surfaces.

DO NOT Use abrasive or flammable cleaners as it will damage parts on the appliance and may start a fire.

Plastic parts:	Wash with warm soapy water and wipe dry.
Porcelain surfaces:	Because of the glass-like composition, most residue can be wiped away with Baking Soda/Water Solution or a specially formulated cleaner. Use nonabrasive scouring powder for stubborn stains.
Painted surfaces:	Wash with mild detergent or nonabrasive cleaner and warm soapy water. Wipe dry with a soft nonabrasive cloth.
Stainless Steel Surfaces:	Stainless steel would get rust marks if not maintained well. To maintain your appliance's high quality appearance, wash with mild detergent a warm soapy water and wipe dry with a soft nonabrasive cloth after each use. Use stainless steel protection liquid like WD-40 on the surface to avoid rust marks.
Cooking Grids:	Use a mild soapy water solution. Non-abrasive scouring powder can be used on stubborn stains then rinse with water.

Cleaning the burner assembly

Follow these instructions to clean and /or replace parts of the burner assembly or if you have trouble igniting the appliance.

1 Turn gas off at control knobs ant gas cylinder.
2 Remove cooking grates, grease tray and grease cup.
3 Remove screw at the end of the burner using a screwdriver.
4 Carefully lift each burner up and away from the valve openings.
5 Wire brush the entire outer surface of the burner to remove food residue and dirt.
6 Clean any blocked ports with a stiff piece of wire or an open paperclip.
7 Check burners for damage, due to normal wear and corrosion some holes may become enlarged. If any large cracks or holes are found replace the burner.
8 Carefully refit burners.
9 Replace screw at the end of the burner.
10 Replace the grease tray and cooking grates.

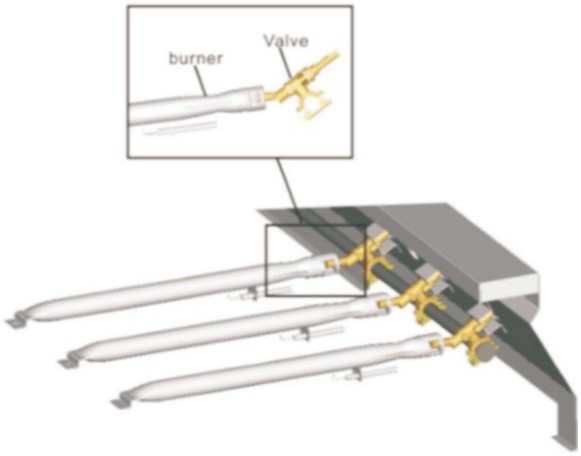

Inspect burner for any damage (cracks or holes).

If damage is found, replace with a new burner. Reinstall the burner, check to ensure that the gas valve orifices are correctly position and secured inside the burner inlet.

We suggest three ways to clean the burner tubes, use the one that is easiest for you.

(A) Bend a stiff wire into a small hook (a light weight coat hanger works well). Run the hook through each burner tube and burner several times.

(B) Use a narrow bottle brush with a flexible handle (Do not use a brass wire brush), run the brush through each burner tube and burner several times.

(C) Wear eye protection: Use an air hose to force air into the burner tube and out of the air ports. Check each port to make sure air comes out of each hole.



⚠ CAUTION

NATURAL HAZARDS SPIDERS

FACT: Sometimes spiders and other insects climb into the grill tubes attached to the burners. The spiders spin webs build nests and lay eggs. The webs or the nests can be very small, but they are very strong and can block the flow of gas. Clean burners prior to use after storing or at the beginning of the season or after a period of one month after not been used.



Spider guards are on the air intakes to reduce this problem, but it will not eliminate it! An obstruction can result in a flashback (a fire in the burner tubes). The grill may still light, but the obstruction does not allow full gas flow to the burners.

TROUBLE SHOOTING

Problem	Possible Cause	Prevention/Solution
Burner(s) will not light.	* No gas flow.	* Check to see if LP tank is empty.
	* Coupling nut and regulator not fully connected.	* Turn the coupling nut about one-half to three quarters additional turns, stop when solid. Tighten by hand only- do not use tools.
	* Obstruction of gas flow.	* Clear burner tube(s).
	* Disengagement of burner to valve.	* Reengage burner and valve.
	* Is the appliance assembled correctly?	* Check steps in assembly instructions.
Sudden drop in gas flow or low flame.	* Out of gas.	* Check for gas in LP tank.
	* Excess flow valve tripped.	* Turn off knobs, wait 30 seconds and light appliance. If flames are still low, turn off knobs and LP tank valve. Disconnect regulator. Reconnect regulator and leak test. Turn on LP tank valve, wait 30 seconds and light the appliance.
Flames blow out.	* High or gusting winds.	* Turn front of grill to face wind or increase flame height.
	* Low on LP gas.	* Refill LP Tank.
	* Excess flow valve tripped.	* Refer to "Sudden Drop in gas flow" above.
Flare-up.	* Grease build-up.	* Clean grill.
	* Excessive fat in meat.	* Trim fat from meat before grilling.
	* Excessive cooking temperature.	* Adjust (Lower) temperature accordingly.
Persistent grease fire.	* Grease trapped by food build-up around burner system.	* Turn knobs to OFF. Turn gas off at LP tank. Leave lid in position and let fire burn out. After grill cools, remove and clean all parts.
Flashback (Fire in burner tube(s)).	* Burner and/or burner tubes are blocked.	* Turn knobs to OFF. Clean burner and/or burner tubes.

TECHNICAL INFORMATION

⚠ WARNING									
*For outdoors use only									
*Accessible parts may be very hot. Keep young children away									
*Read the instruction manual carefully before using the appliance									
*Warning: It's forbidden to place gas cylinders into the compartment									
Appliance Name		Outdoor Use Gas Grill		Serial No.					
Model No.		CBM411							
Appliance Category		I3+(28-30/37)		I3B/P(30)		I3B/P(37)		I3B/P(50)	
Type of gas		Butane	Propane	Butane,Propane or their mixture		Butane,Propane or their mixture		Butane,Propane or their mixture	
Gas Pressure		28-30mbar	37mbar	30mbar		37mbar		50mbar	
Total Heat Input (Hs)		21.9	kW	21.9	kW	24.6	kW	21.9	kW
Gas consumption		1527	g/h	1527	g/h	1731	g/h	1527	g/h
Injector	Main grill	0.93	mm	0.93	mm	0.93	mm	0.8	mm
	Side grill	1.02	mm	1.02	mm	1.02	mm	0.91	mm
	Back grill	0.94	mm	0.94	mm	0.94	mm	0.84	mm
				✓					
* Barbecue lighting and Led light: 220-240V, 50HZ									
* Barbecue rotisserie AC motor: 220-240V, 50HZ									

EXPANDED VIEW

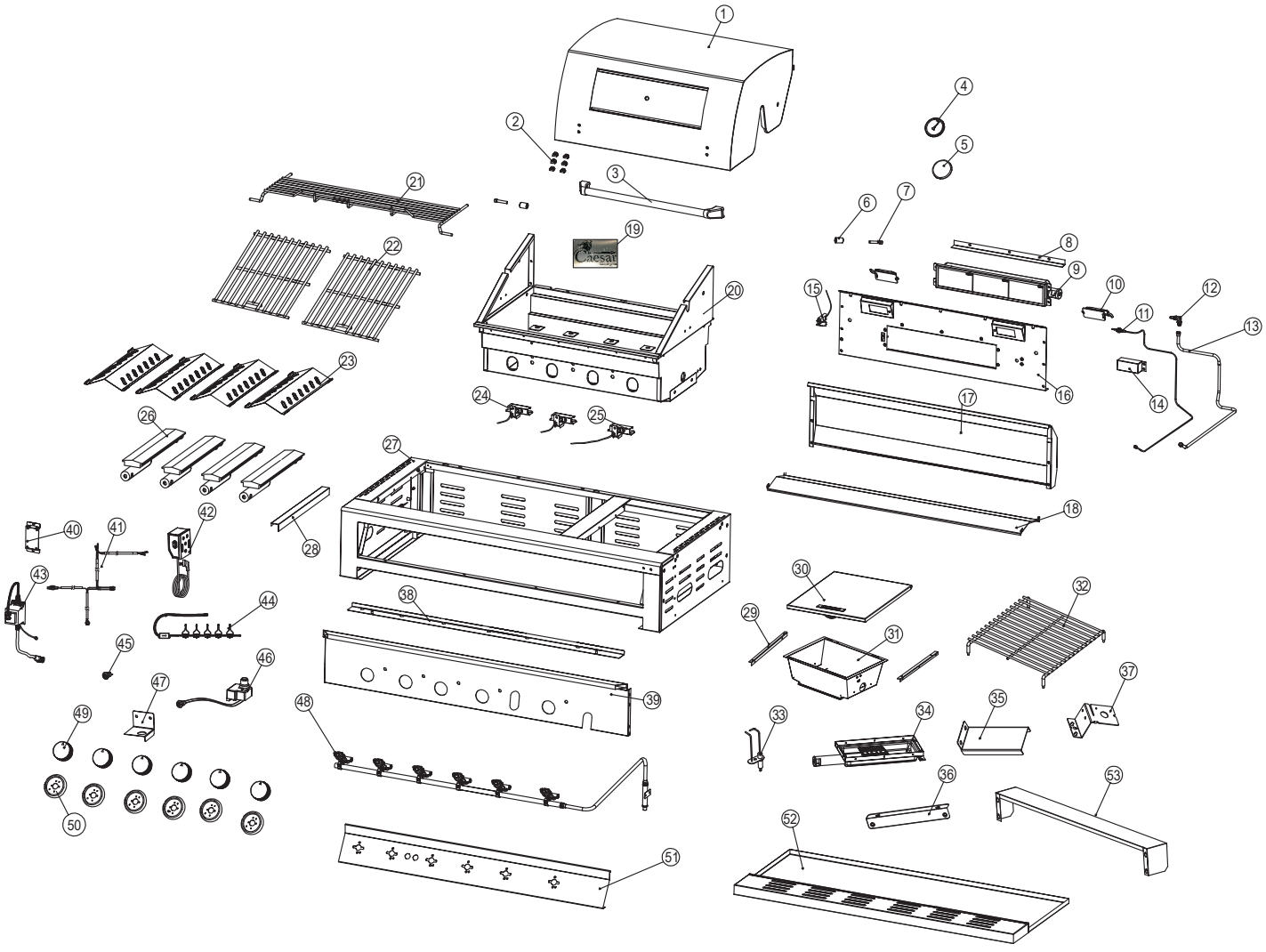

Key	Description	Quantity
1	Hood	1
2	Bumper	6
3	Hood handle	1
4	Temperature gauge	1
5	Temperature badge	1
6	Shaft sleeve for hood	2
7	Shaft for hood	2
8	Back burner waterproof panel	1
9	Infrared back burner	1
10	Halogen lamp	2
11	Thermocouple	1
12	Rear burner joint	1
13	Stainless steel hose	1
14	Thermocouple box	1
15	Rear burner inginition	1
16	Grill back panel	1
17	Back burner cover	1
18	Grease tray heat insulation panel	1
19	Logo(caesar)	1
20	Fire box	1
21	Warming rack	1
22	Cooking grid	2
23	Flame tamer	4
24	Main burner igniter(L=1480)	2
25	Main burner igniter(L=1780)	1
26	Cast stainless steel burner	4
27	Panel	1

Key	Description	Quantity
28	Heat insulation panel	1
29	Side burner soup plate support plate	2
30	Side burner lid	1
31	Side burner soup plate	1
32	Side burner trivet	1
33	Side burner inginition	1
34	Infrared side burner	1
35	Hood side burner inginition	1
36	Side burner support plate	1
37	Rotisserie motor bracket	1
38	Knob light fixing panel	1
39	Heat insulation panel	1
40	Transformer fixing panel	1
41	Body led wiring loom	1
42	Ac rotisserie motor	1
43	Transformer	1
44	Spotlight wires	1
45	Light button	1
46	Pulse igniter	1
47	Pulse fixing panel	1
48	Gas valve assembly	1
49	Control knob	6
50	Control knob seat	6
51	Control panel	1
52	Grease tray	1
53	Extension panel	1

EXPANDED VIEW

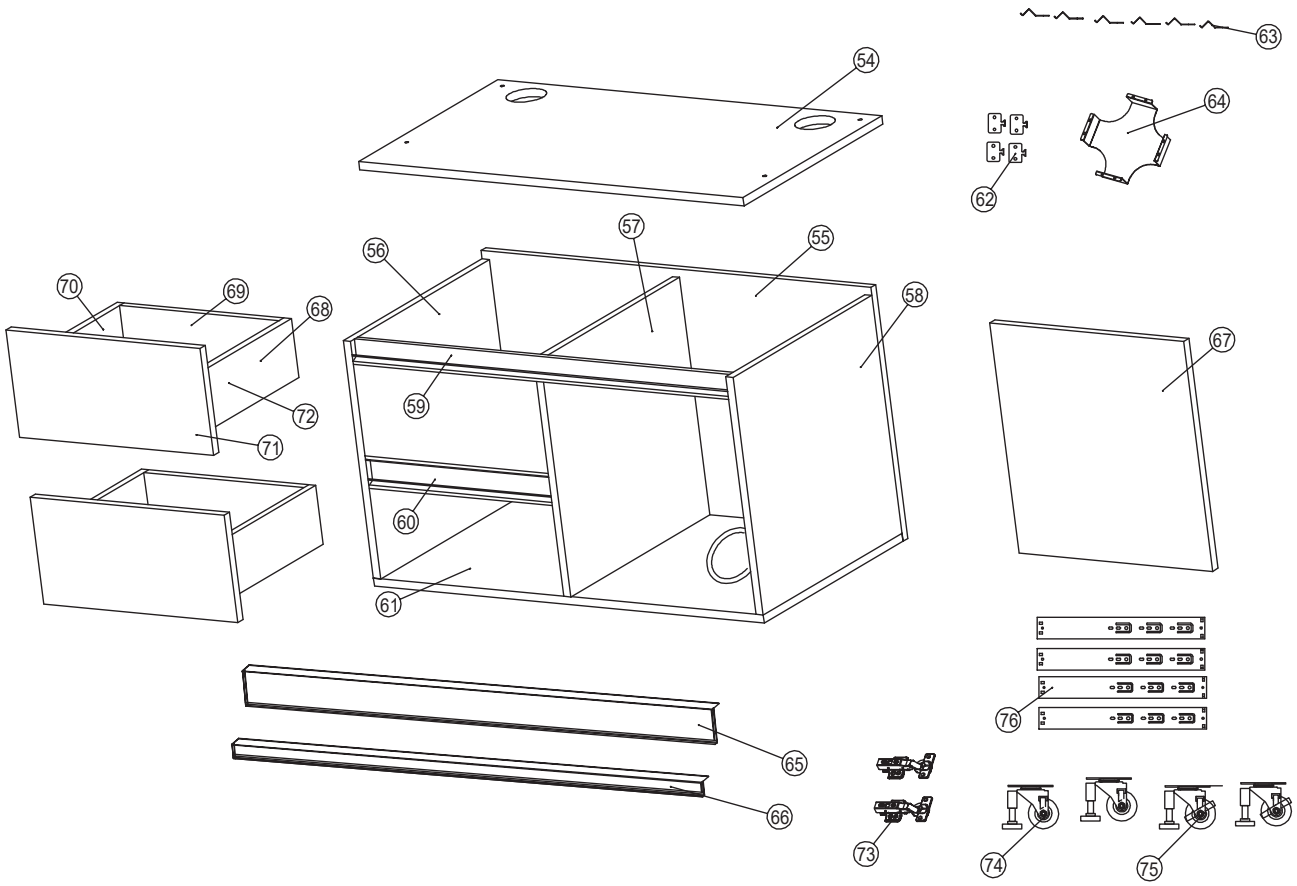

Key	Description	Quantity
54	Trolley Top Panel	1
55	Trolley Back Panel	1
56	Trolley Left Panel	1
57	Trolley Right Inner Panel	1
58	Trolley Right Panel	1
59	L-Shape Handle-Free	1
60	C-Shape Handle-Free	1
61	Baseboard	1
62	Indices	4
63	Foot Line Presser	8
64	Gas Cylinder Rack	1
65	Front Foot Line	1

Key	Description	Quantity
66	Back Foot Line	1
67	Trolley Right Door	1
68	Drawer Right Side Panel	2
69	Drawer Back Panel	2
70	Drawer Left Side Panel	2
71	Drawer Panel	2
72	Drawer Bottom Board	2
73	Door Hinge	2
74	Wheel with No Break	2
75	Wheel with Break	2
76	Guide Rail	2

ASSEMBLY INSTRUCTIONS

IMPORTANT: Remove any transit protection material before use.

Tools required:



Philips head screwdriver

IMPORTANT

Remove all packing and transit protection before assembly.

CAUTION: Ensure no packing material is left in BBQ before lighting.

Step 1

The battery compartment is in the cabinet. Follow below procedures to install one AA battery.

Unscrew ignition cap and place a Battery (size AA - not supplied) into place with the (+) end facing outwards. Screw cap back on. Upon pressing the ignition button, you should hear a clicking sound.

For manual ignition, use a match placed onto the end of match holder.

Note: This is chained to the inside of Drawer .

Step 2

Plug the power cord into a power outlet and turn ON. To avoid damage to the power cord, make sure it is kept away from the product when in use.

Step 3

Turn the light power switch on. The lights above the control knob will illuminate, along with the lights in the hood.

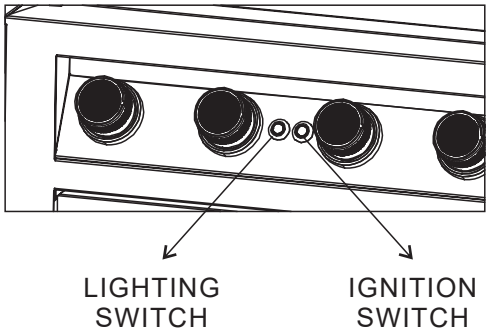

Step 4

Attach the Bench Top Extension Panel.

① Install the extension filler panel on the back of the BBQ using 4pcs M5x10mm screws but don't tighten them.

② Hang the bench top extention panel on the screws.

③ Tighten the screws to secure both the rear panel & bench top extention panel.



M5x10mm 4PCS

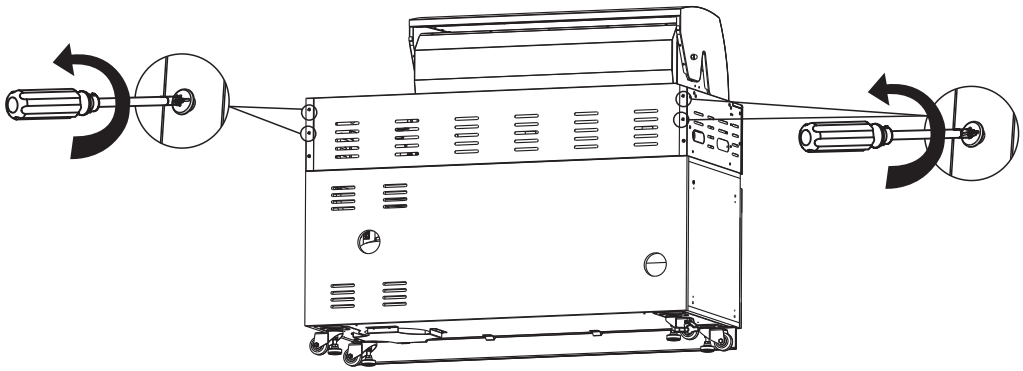

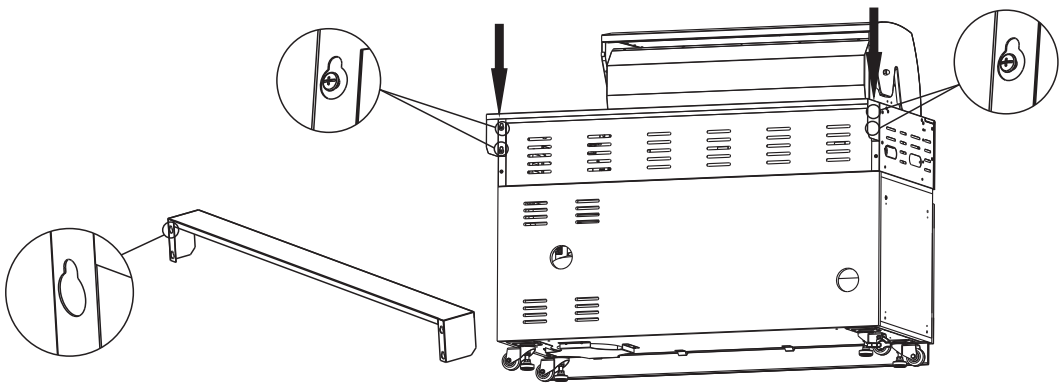

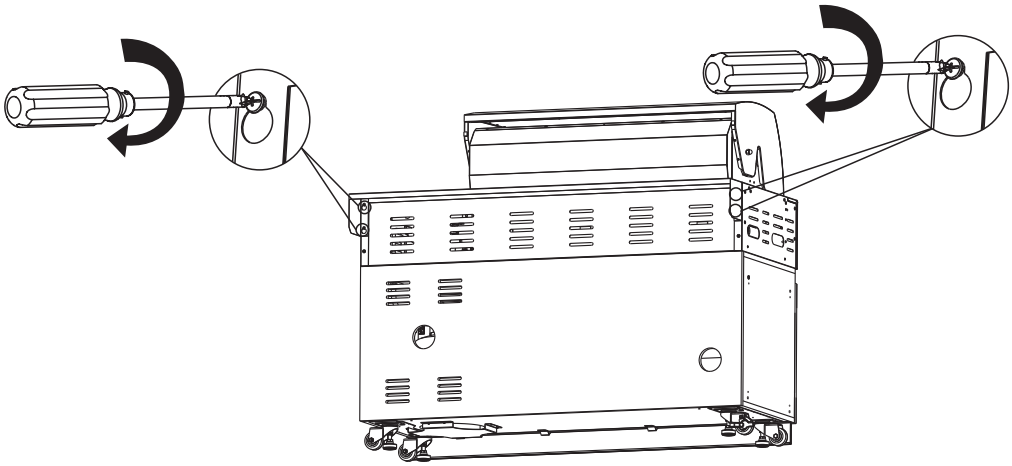

Step 5

Install the cylinder holder for the gas bottle.

① Install the Gas Bottle Cylinder with 8pcs M5x25mm Screws.



M5x25mm 8PCS

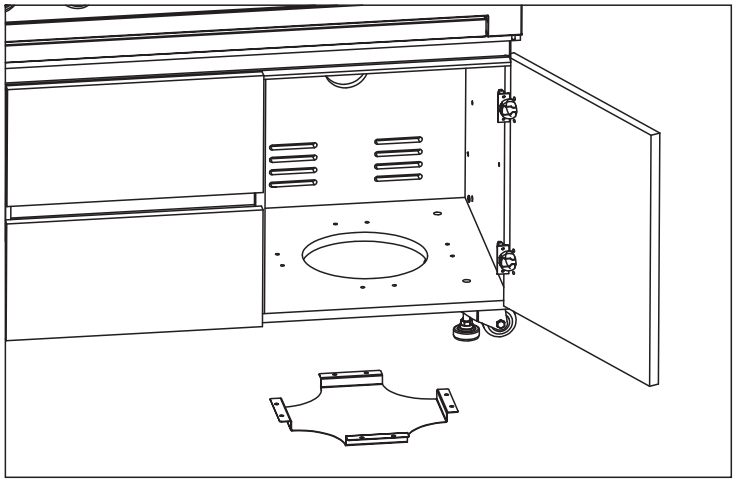

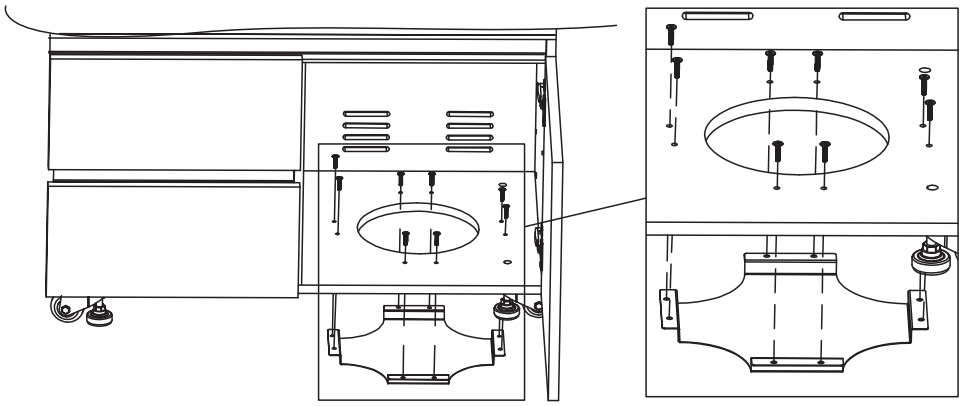

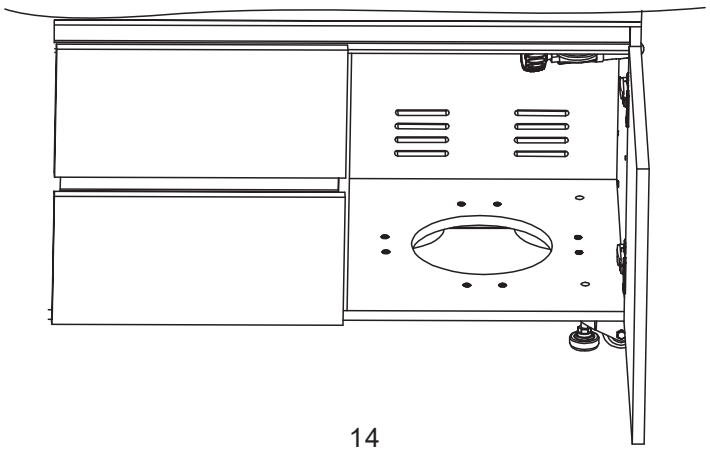

Step 6

Install the kick-boards.

Hang the kick-boards on the hanger.

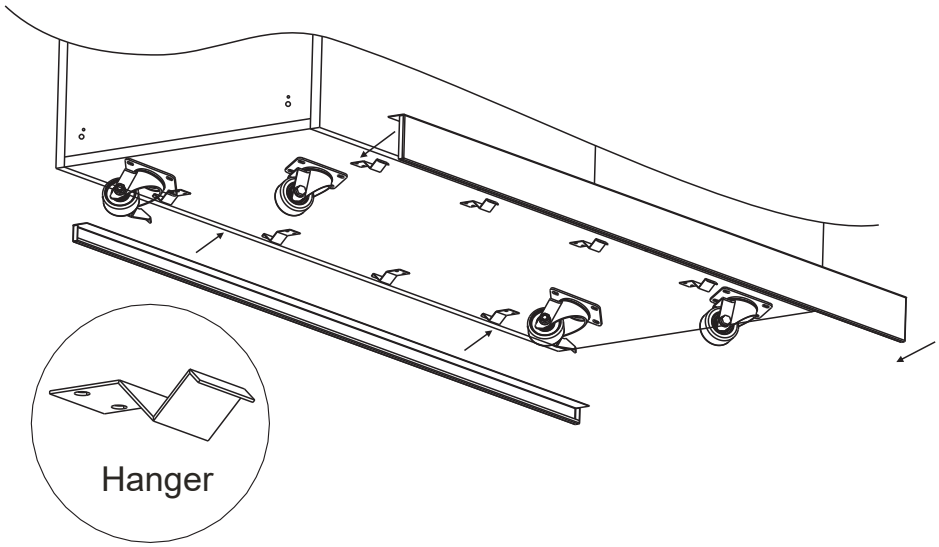

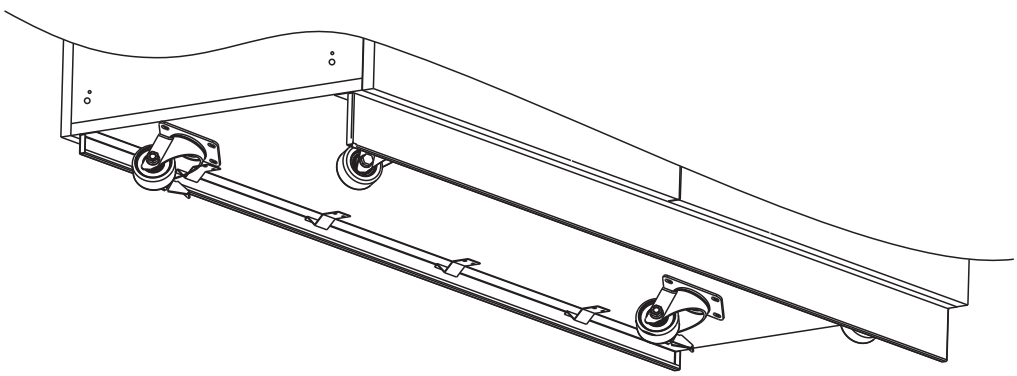

Step 7

Install the End Panel.

① Insert 4pcs M4x12mm screws.

② Hang the end panel over the M4x12mm screw.

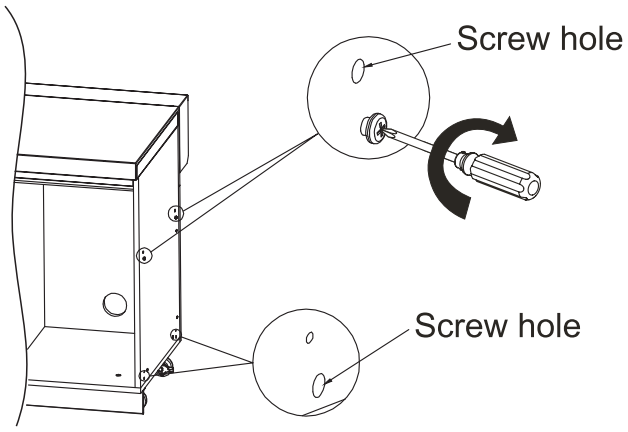

not supplied

M4x12mm Screw 4PCS

---

③ Pressing down and locking into place.

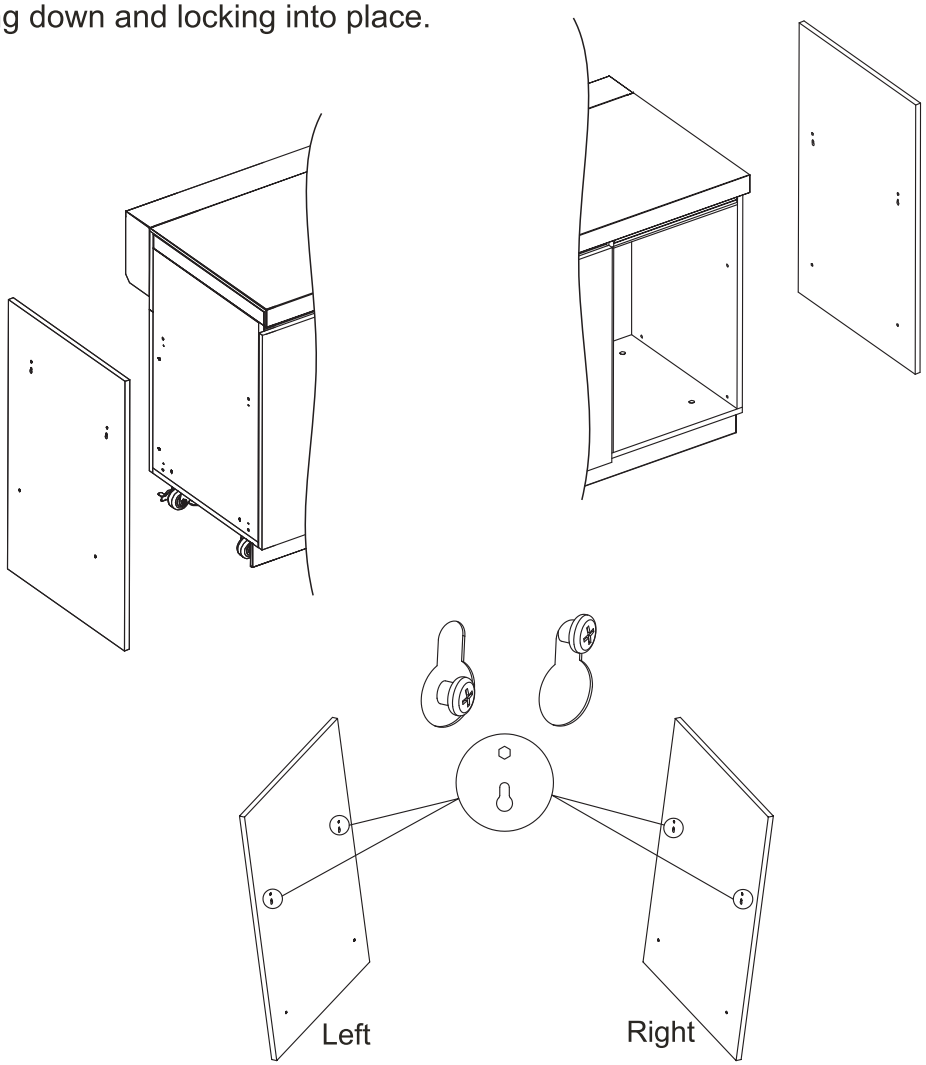

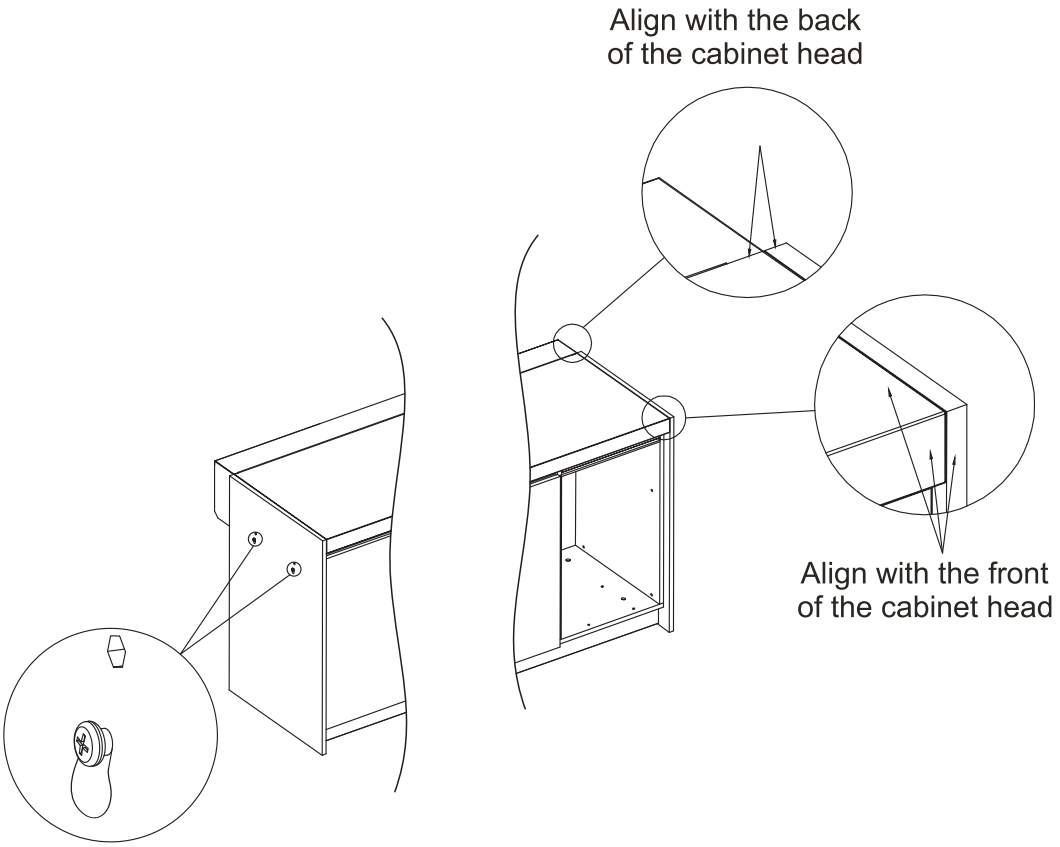

④ Secure the end panel with the M5x25mm screws.

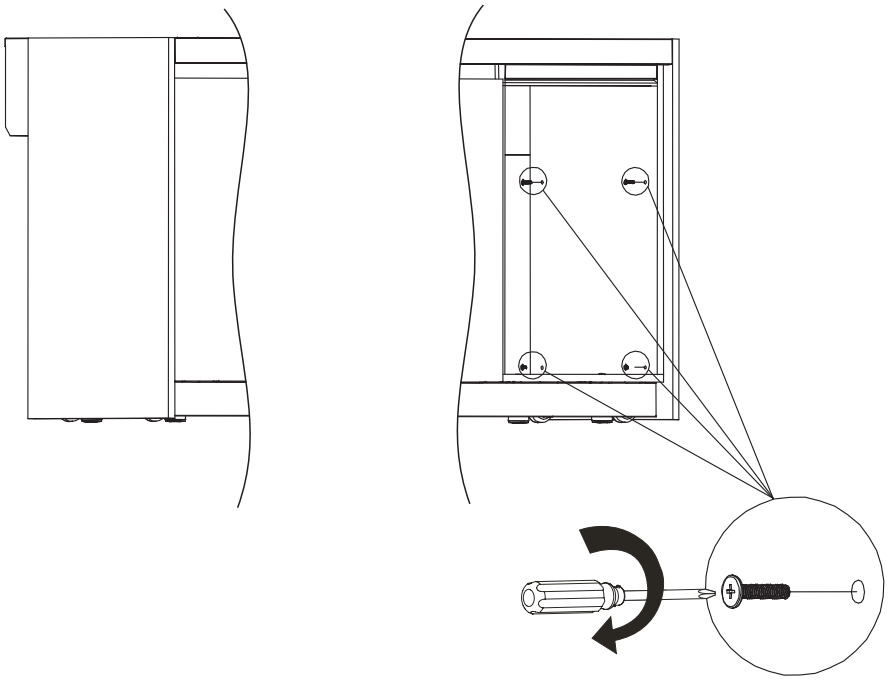

Note: End panels will only be installed on the right and left sides of each kitchen.



M5x25mm 8PCS

Package contents

PARTS	Description	Quantity
A	Rotisseries Motor AC / Motor DC	1
B	Bolt and Nut	2
C	Motor Bracket	1
D	Spit Rod collar	1
E	4-Sprong Meat Fork	2
F	Spit Rod	1
G	Collar	1
H	Weight Balance (Counterweight)	1
I	Washer	2
J	Handle	1

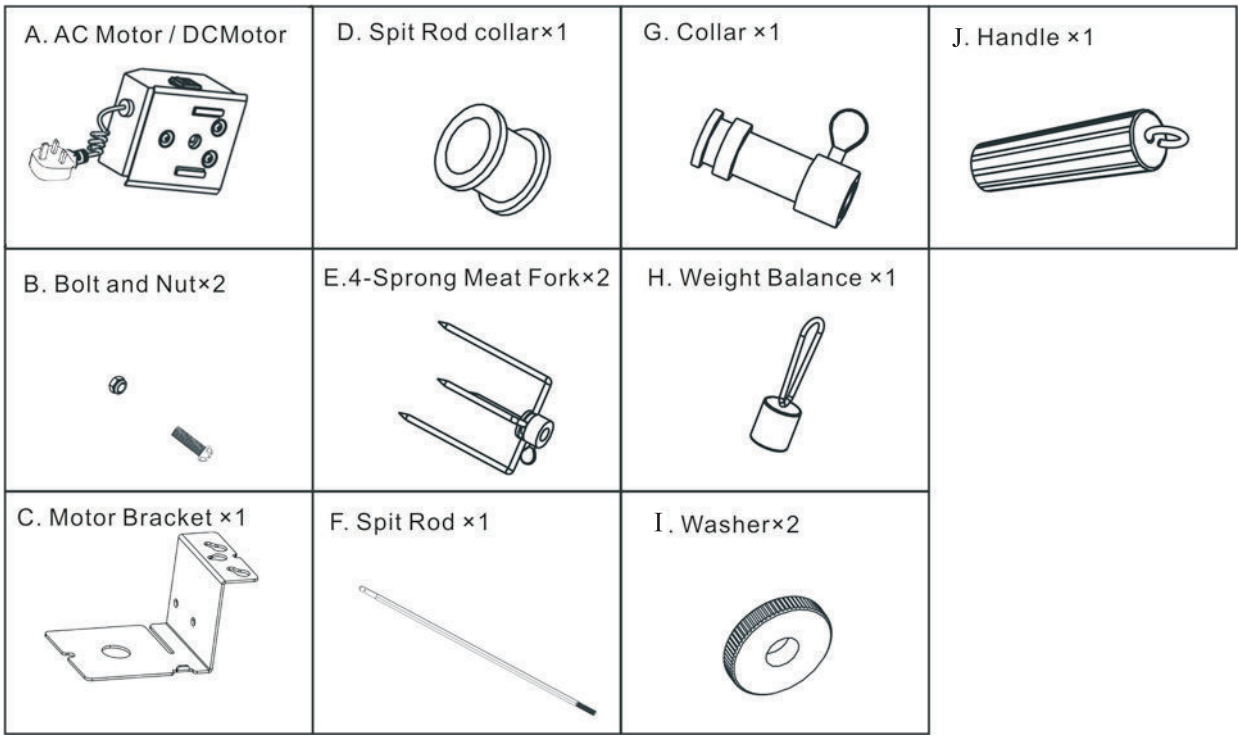

Subject to Model: AC motor. Please refer it for assembly of DC Motor

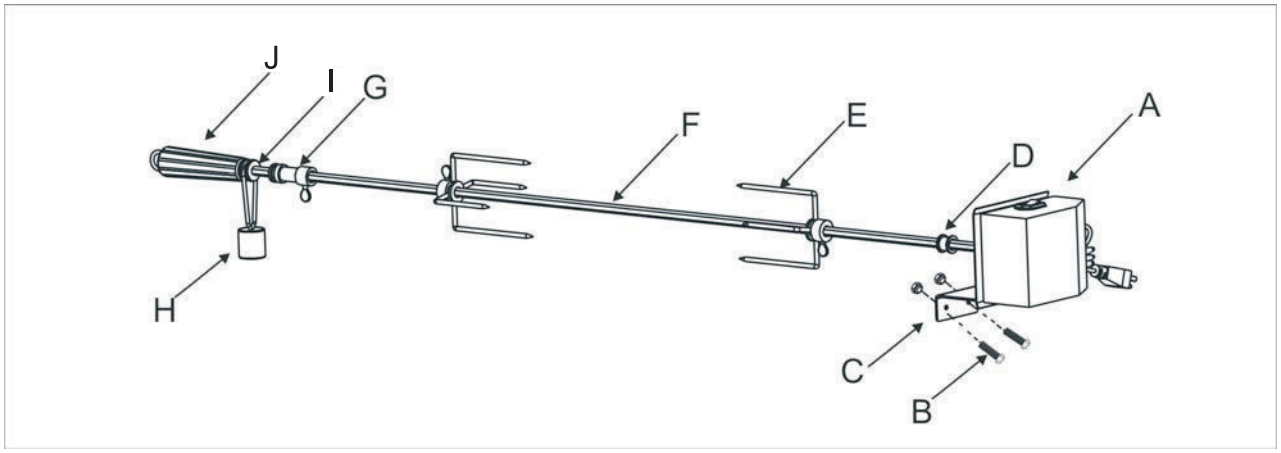

ASSEMBLY, INSTALLATION AND OPERATION INSTRUCTIONS.

Assembling and Attaching Rotisseries Kit to Grill

1. Using 2 sets of bolts, nuts and washers provided, attach the bracket to the right side of the grill as shown in Fig 1 by passing two bolts through the bracket and then the outside of your grill. Place a washer on the end Of each bolt. Secure bolts with nuts. Take care not to over tighten the bolts. Repeat for right side.
2. Slid rotisseries Motor over right side Bracket.(Fig 2,3.)
3. Place the collar ,Spit Rod collar and meat prongs onto the rotisseries rod and attach it to the support on the right-hand side of the rotisseries bracket on the grill . The rod should turn smoothly. (Fig 4.)
4. Place washer onto the rotisseries rod, followed by the weight balance. Then attach the handle into the rotisseries rod. The weight balance should be positioned in the space between the washer and handle of the rod (Fig 5,6.)
6. Place the end of the rotisseries rod into the motor. Make sure rotisseries rod. is aligned properly with the motor. (Fig 7.)

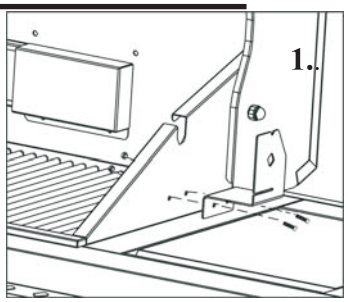

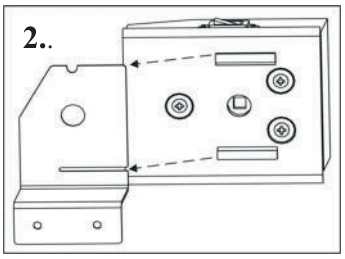

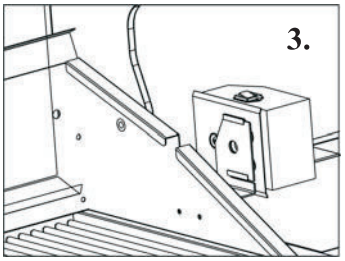

NOTICE: The Motor should be located on the right-hand side.

Using the Rotisserie burner.

(Also see your grill instruction manual.)

Plug the unit into an electrical outlet. Slide one of the meat prongs onto the rod (prongs toward the food). Center the food to be cooked on the rod, followed the thumbscrews. It may also be necessary to wrap food with butchers string,(never use nylon or pl astic string) to secure loose portions.

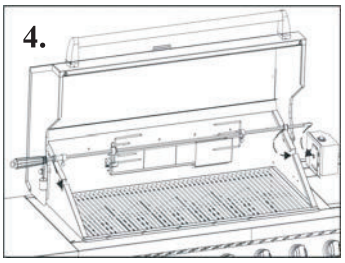

Once the food is secure, insert the pointed end of the rotisseries rod into the motor assembly and rest the other end on the support on the right hand side of the grill. If needed remove the cooking grates for more room. Turn the power switch to the "O" Position to start the rotisseries motor.

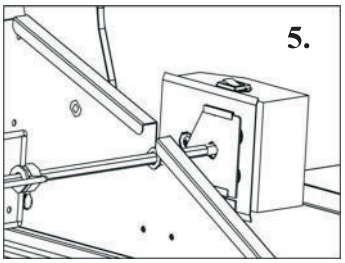

Notes: When using the rotisseries burner, make sure all main burners are off.
When using the rotisseries burner, it is not recommended to use Side burners as injury may result from burning.

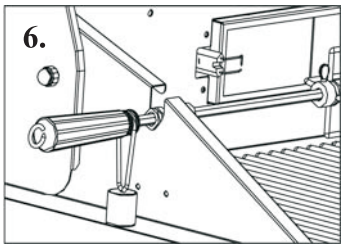

CARE AND MAINTENANCE.

Turn off , unplug and remove the rotisserie kits when not in use.
After using, clean all metal parts using a dry cloth to avoid rusting.
Do not immerse any parts in water.
Store in a dry place.

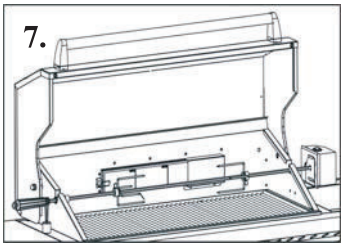

TROUBLESHOOTING

If the rod is not rotating at a constant speed, reposition the meat on the forks and rod to adjust the weight so that it is balanced.
The rod also can be balanced by adjusting the Counterweight.

CABINET JOINING INSTRUCTIONS

WARNING

- **Do not install the doors, drawers, fridge, trash can and trash frame before joining the cabinets.**

WARNING

- **Insert a screwdriver into every cabinet connecting holes prior to joining the cabinets to make sure the honeycomb aluminum does not obstruct the cabinet connecting holes.**

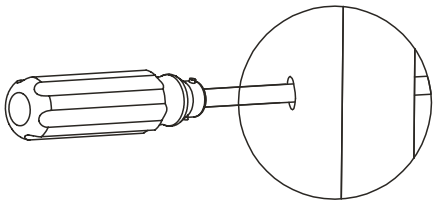



not supplied

WARNING

Please adjust the retractable leg and make sure it is securely positioned on the ground after installation.

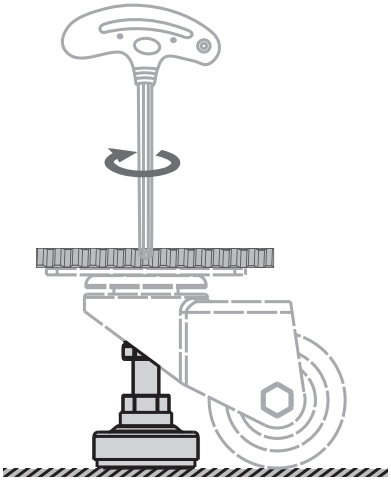

WARNING FOR WORKTOP FITTING

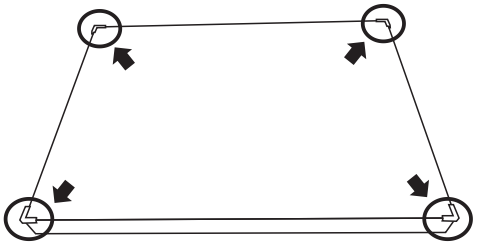

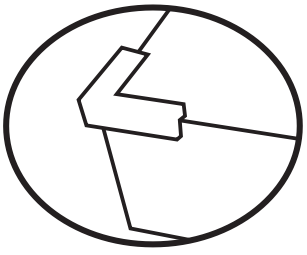

TAKE EXTRA CARE WHEN FITTING TWO UNITS TOGETHER!

DO NOT

BASH THE WORK SURFACES TOGETHER AS THEY MAY CHIP!

LEAVE THE PROTECTIVE CORNERS IN PLACE UNTIL THE POINT WHEN YOU SCREW THE TWO UNITS TOGETHER.

AVOID DRAGGING HEAVY ITEMS ON WORK SURFACES; ABRASION WILL CAUSEWHITE DISCOLORATION.

To join your kitchen together use cabinet connecting screw for 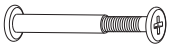

Triple Drawer cabinet / Grill cabinet / Fridge Cabinet / Sink Cabinet

Note: End panel fastening screw for connecting,pls use the M5x25 
The screw hole of the End panel has screw nut inside).

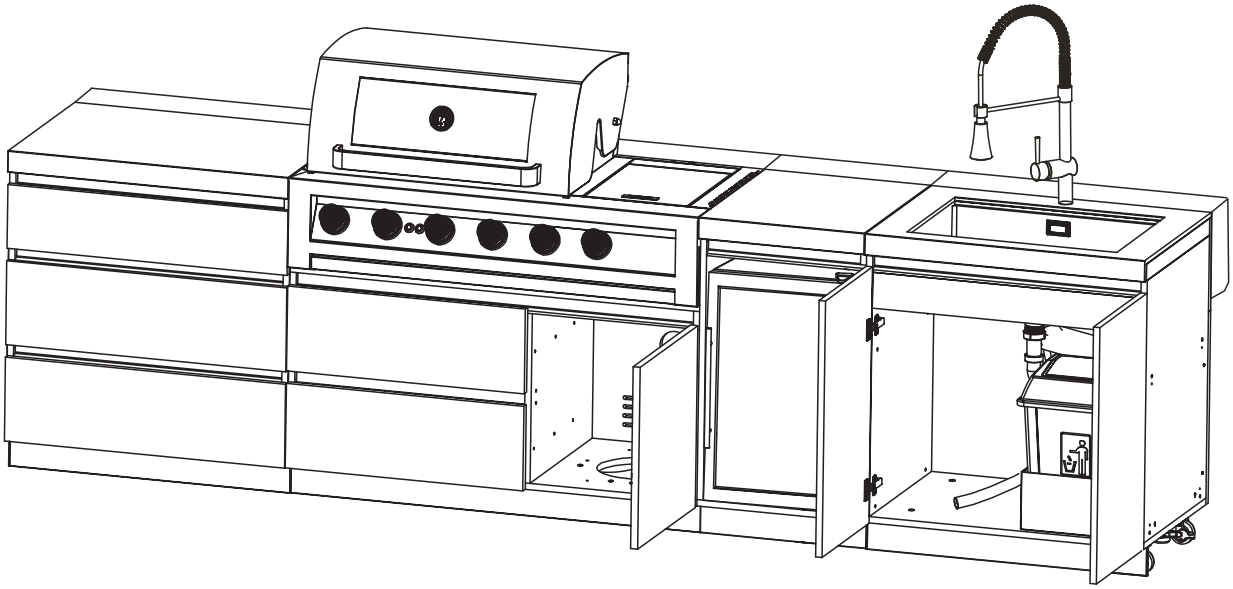

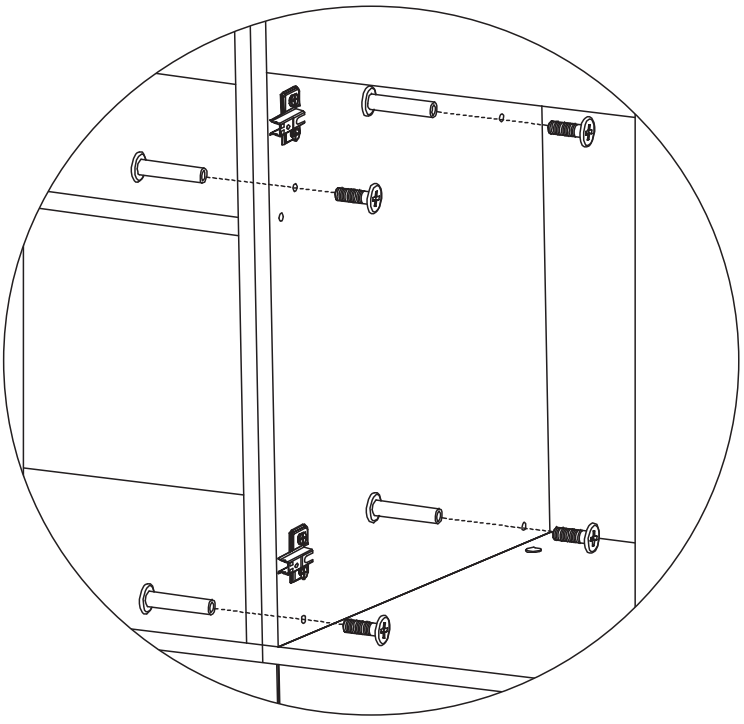

CARE AND CLEANING

APPLIANCE MUST BE COMPLETELY COOL WHEN CLEANING. DO NOT SPRAY ANY CLEANER OR LIQUIDS ON THE APPLIANCE WHEN HOT.

The appliance must be cleaned as often as once a month (depending on use) to prevent grease build-up and other food deposits.

INTERIOR

CLEANING THE COOKING GRIDS

After cooking, turn control knobs to "OFF" and let grill cool before attempting to clean your cooking grids. Before first use and periodically it is suggested that you wash the cooking grids in a mild soap and warm water solution. You can use a washcloth or a vegetable brush to clean your cooking grids.

CLEANING THE FLAME TAMERS

Washing the flame tamers after every use is not necessary but periodically it is suggested you wash them in a soap and warm water solution. Use a wire brush to remove stubborn burned on cooking residue. Dry the flme tamers thoroughly before reinstalling.

CLEANING THE BURNERS

IMPORTANT: Gas control knobs should be in the "OFF" position, and fuel line should be disconnected from gas valve manifold. To reduce the chance of FLASHBACK, the procedure below should be followed at least once a month or when your grill has not been used for an extended period of time.

1. Remove burners from grill by carefully lifting each burner up and away from gas valve orific.
2. Wire brush entire outer surface of burner to remove food residue and dirt. Clean any clogged ports with a stiff wire such as an open paper clip.
3. Inspect the burner for damage (cracks or holes) and if such damage is found, order and install a new burner.
4. After installation, check to insure that gas valve orifices are correctly placed inside ends of burner tubes. Also check position of spark electrode.